TERMINALS OF ECU

SKID CONTROL ECU (With VSC):

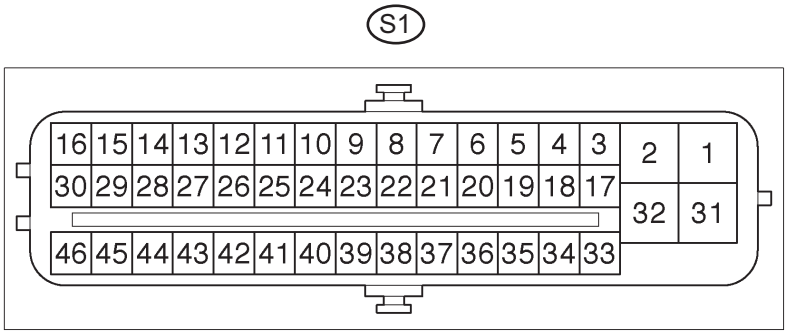

F045156E05

1. TERMINAL DESCRIPTION

Symbols (Terminal No.)	Terminal Description
TSI (7)	Ambient temperature sensor signal
D/G (13)	Diagnosis tester communication signal
WTIR (26)	Tire pressure warning light signal
STP (27)	Stop light switch assembly input signal
GND1 (32)	Ground
INIT (41)	Tire pressure warning reset switch

2. TERMINAL INSPECTION

(a) Disconnect the connector and measure the voltage on the wire harness side.
HINT:
Voltage can not be measured with the connector connected to the skid control ECU as the connector is water resistance.

Symbols (Terminal No.)	Wiring Color	Terminal Description	Condition	Specified Condition
STP (27) - GND1 (32)	G-W - W-B	Stop light switch assembly input signal	Brake pedal depressed	10 to 14 V
STP (27) - GND1 (32)	G-W - W-B	Stop light switch assembly input signal	Brake pedal released	Below 1.5 V
GND1 (32) - Body ground	W-B - Body ground	Ground	Always	Below 1 V

SKID CONTROL ECU (without VSC):

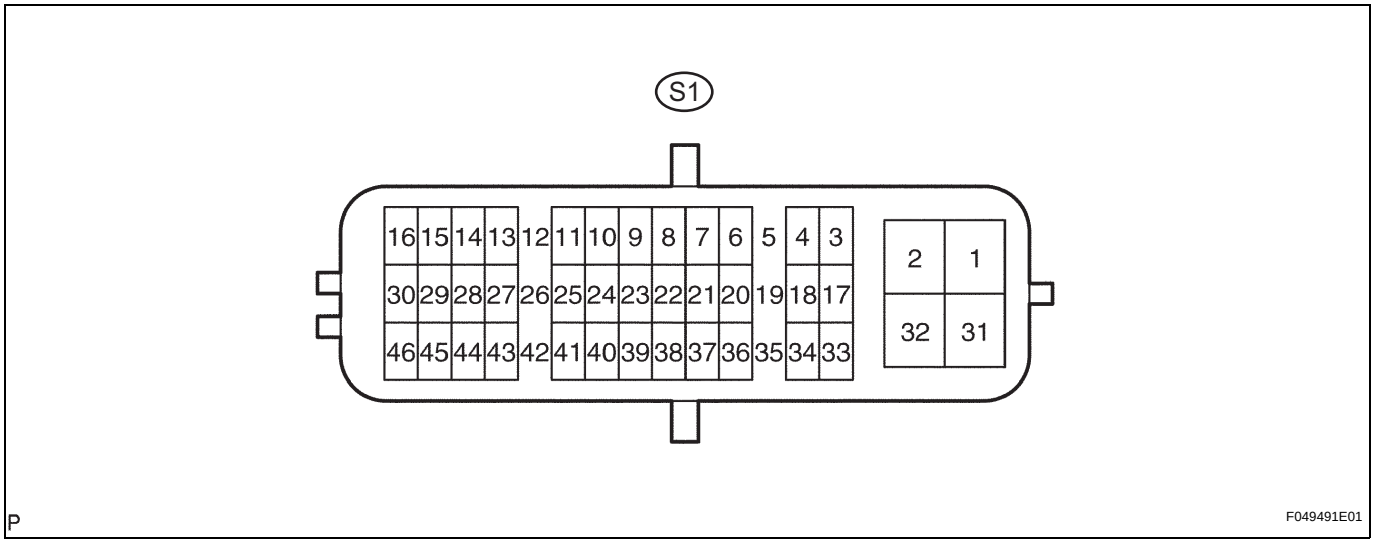

3. TERMINAL DESCRIPTION

Symbols (Terminal No.)	Terminal Description
GND1 (1)	Ground
D/G (13)	Diagnosis tester communication signal
STP (14)	Stop light switch assembly input signal
WTIR (33)	Tire pressure warning light signal
TSI (34)	Ambient temperature sensor signal
INIT (41)	Tire pressure warning reset switch

4. TERMINAL INSPECTION

(a) Disconnect the connector and measure the voltage on the wire harness side.
HINT:
Voltage can not be measured with the connector connected to the skid control ECU as the connector is water resistance.

Symbols (Terminal No.)	Wiring Color	Terminal Description	Condition	Specified Condition
GND1 (1) - Body ground	W-B - Body ground	Ground	Always	Below 1 V
STP (14) - GND1 (1)	G-W - W-B	Stop light switch assembly input signal	Brake pedal depressed	10 to 14 V
STP (14) - GND1 (1)	G-W - W-B	Stop light switch assembly input signal	Brake pedal released	Below 1.5 V

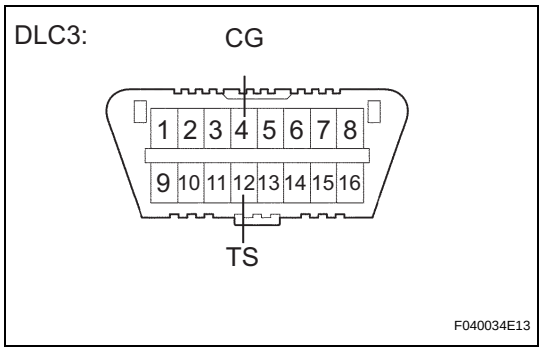

DIAGNOSIS SYSTEM

TW

1. DIAGNOSTIC SYSTEM

(a) Inspect the battery voltage.
Battery voltage:
11 to 14 V
If voltage is below 11 V, recharge the battery before proceeding.

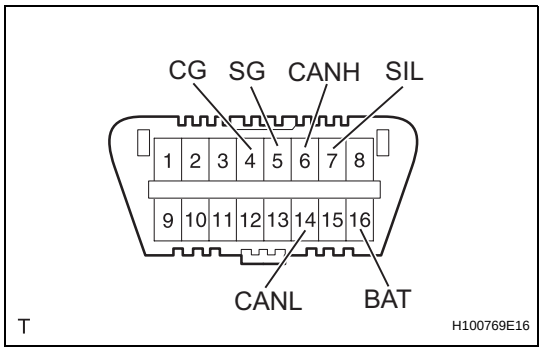

2. CHECK DLC3

(a) The ECU uses the ISO 15765-4 for communication protocol. The terminal arrangement of the DLC3 complies with SAE J1962 and matches the ISO 15765-4 format.

Symbols (Terminal No.)	Terminal Description	Condition	Specified Condition
SIL (7) - SG (5)	Bus "+" line	During transmission	Pulse generation
CG (4) - Body ground	Chassis ground	Always	Below 1 Ω
SG (5) - Body ground	Signal ground	Always	Below 1 Ω
BAT (16) - Body ground	Battery positive	Always	11 to 14 V
CANH (6) - CANL (14)	CAN bus line	Ignition switch off*	54 to 69 Ω
CANH (6) - CG (4)	HIGH-level CAN bus line	Ignition switch off*	200 Ω or higher
CANL (14) - CG (4)	LOW-level CAN bus line	Ignition switch off*	200 Ω or higher
CANH (6) - BAT (16)	HIGH-level CAN bus line	Ignition switch off*	6 kΩ or higher
CANL (14) - BAT (16)	LOW-level CAN bus line	Ignition switch off*	6 kΩ or higher

NOTICE:
***: Before measuring the resistance, leave the vehicle as is for at least 1 minute and do not operate the ignition switch, any other switches or the doors.**

(b) If the result is not as specified, DLC3 may have a malfunction. Repair or replace the harness and connector.
HINT:
Connect the cable of the intelligent tester to DLC3, turn the ignition switch to the ON position and attempt to use the tester. If the display indicates that a communication error has occurred, there is a problem either with the vehicle or with the tester.
- If communication is normal when the tester is connected to another vehicle, inspect DLC3 of the original vehicle.
- If communication is still not possible when the tester is connected to another vehicle, the problem may be in the tester itself. Consult the Service Department listed in the tester's instruction manual.

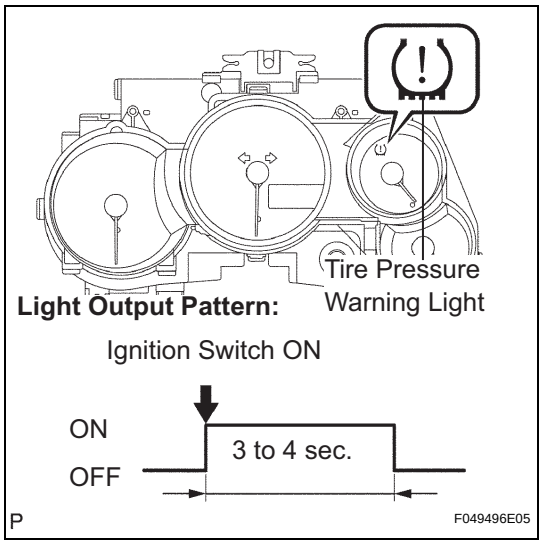

3. CHECK WARNING LIGHT

(a) Turn the ignition switch to the LOCK position.

(b) When the ignition switch is turned to the ON position, the light should come on for 3 to 4 seconds and then go off.

HINT:

If the tire pressure warning light has a defect, check the tire pressure warning light output patterns and the problem symptoms table (See page TW-12).

4. TIRE PRESSURE WARNING LIGHT CHART:

Priority	Condition	Tire Pressure Warning light Output Pattern
1	Ignition switch is in the ON position.	Tire pressure warning light comes on for 3 seconds when the ignition switch is turned to the ON position. (However, during initialization, the light comes on for 4 seconds.) (See waveform 1)
2	System abnormal 1 Tire pressure warning light signal circuit is open. HINT: When the tire pressure warning light drive signal circuit opens due to a skid control ECU malfunction, communication error, open circuit in the wire harness, etc., the tire pressure warning light comes on. (Active light Circuit)	Tire pressure warning light comes on (See waveform 2)
3	System abnormal 2 ABS system malfunction Speed sensor malfunction Stop light switch assembly malfunction HINT: The skid control ECU monitors the speed sensor signal and the stop light switch signal, and the tire pressure warning light blinks.	Tire pressure warning light blinks (Comes on and goes off repeatedly at 0.5 second intervals.) (See waveform 3) HINT: (When the skid control ECU detects a system abnormal 2 malfunction, check the ABS DTCs and proceed to the pages on which the ABS DTCs are described.)
4 (When in test mode)	Tire pressure warning reset switch is turned on during test mode. (Press and hold the tire pressure warning reset switch.)	Tire pressure warning light comes on when the tire pressure warning reset switch is turned on. (See waveform 4)
5	Initialization mode is received. HINT: See step 3 for initialization procedure.	Tire pressure warning light blinks 3 times (Comes on and goes off repeatedly at 1 second intervals.) (See waveform 5)
6	Failure to initialize when driving the vehicle. HINT: This pattern will occur under the following 3 conditions: 1. New vehicle from factory 2. ECU replacement 3. Failure to initialize	Tire pressure warning light blinks (A cycle of ON (0.5 sec.) and OFF (2.5 sec.) repeats.) (See waveform 6)
7	Outputs tire pressure check result. HINT: The result is output only when driving at 19 mph (30 km/h) or more.	Tire pressure is judged to be normal: (See waveform 7) Tire pressure is judged to be low: (See waveform 8)
8	Warning cancellation HINT: 1. With the vehicle stopped turn the ignition switch to the ON position. 2. Press the tire pressure warning reset switch for a few seconds.	(See waveform 9) (See waveform 10)

HINT:
When the skid control ECU does not operate properly, the ABS warning light comes on to indicate an ABS system malfunction.

(a) Reference: waveform 1

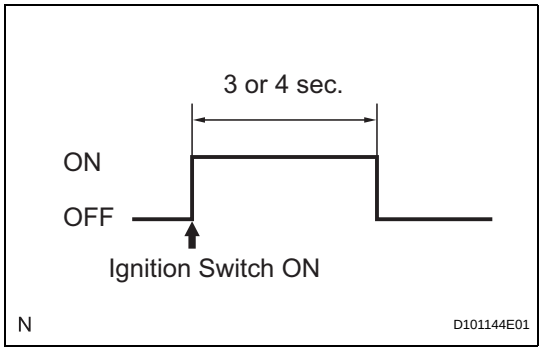

(b) Reference: waveform 2

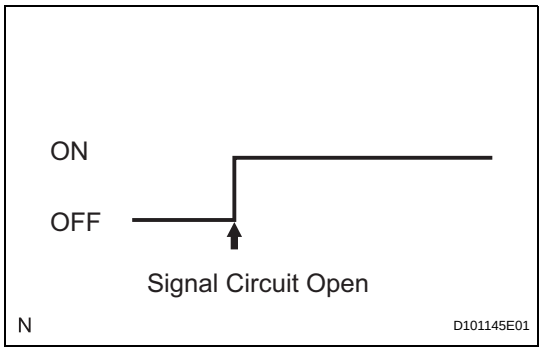

(c) Reference: waveform 3

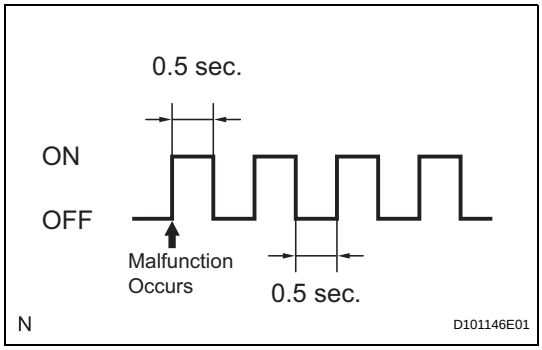

(d) Reference: waveform 4

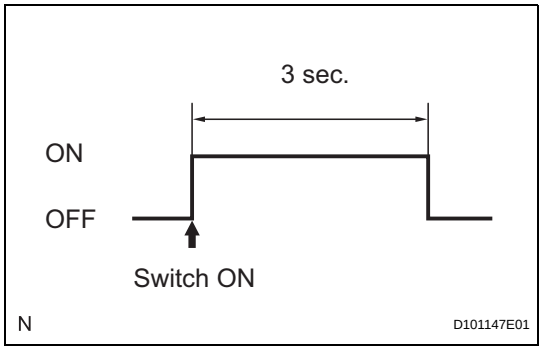

(e) Reference: waveform 5

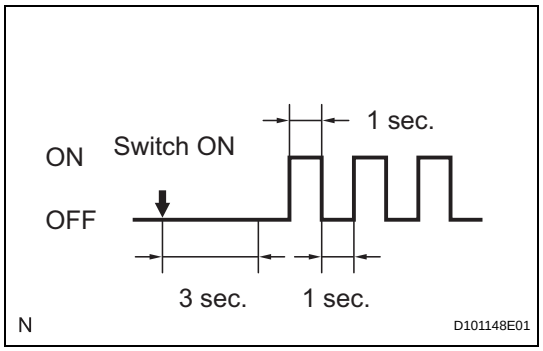

(f) Reference: waveform 6

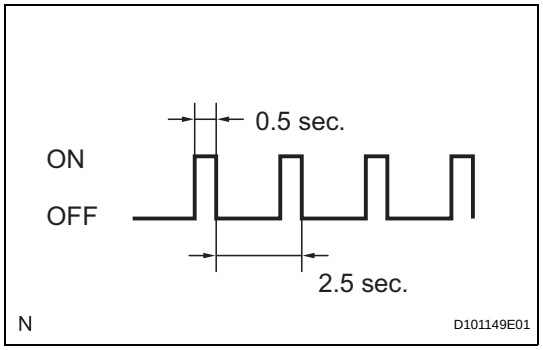

(g) Reference: waveform 7

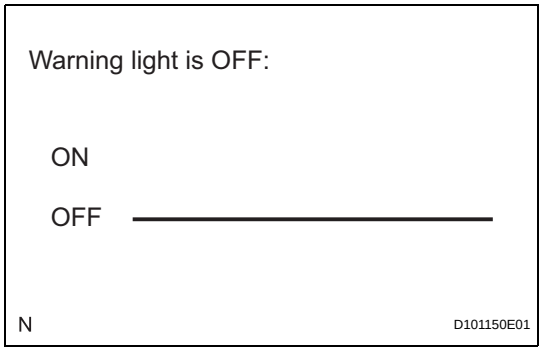

(h) Reference: waveform 8

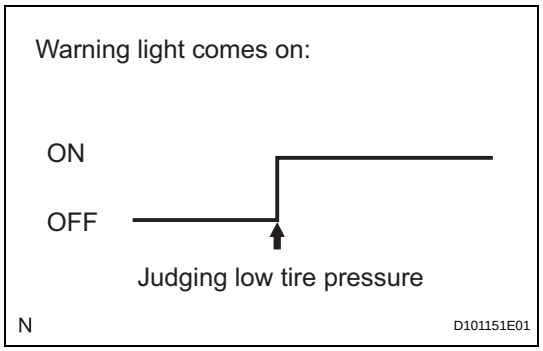

(i) Reference: waveform 9

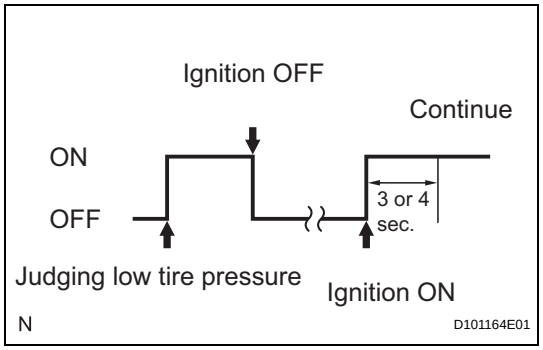

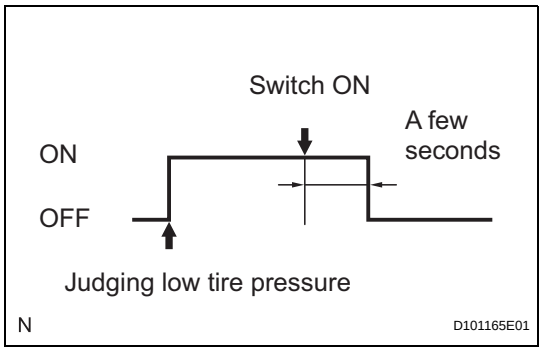

(j) Reference: waveform 10